KitchenAid® Outdoor Grills
Portable and Built-in – non-combustible construction

PRODUCT MODEL NUMBERS

KFGR270P	KBGN274P
KFGR274P	KBGN292P
KFGR292P	KBGN364P
KFGR364P	
KFGR382P	

Gas supply:

Built-in Grills are set for Natural gas use and have a pressure regulator with 1/2" female pipe threads. Grills can be converted to L.P. gas. If local codes permit, use a flexible stainless steel tubing gas connector, design-certified and marked "outdoor" by AGA or CSA International, to connect the grill to the rigid gas supply line. 5/8" diameter line is recommended.

Portable Grills are set for use with L.P. gas fuel tank. Grills can be converted to Natural gas.

Electrical supply: For rotisserie use, a 120-volt, 60-Hz, AC-only, 15-ampere, electrical supply is required.

A minimum of 12" (30.5 cm) must be maintained between the grill hood, sides and back and any combustible construction. A 12" (30.5 cm) minimum clearance must also be maintained below the cooking surface and any combustible construction.

OVERALL DIMENSIONS

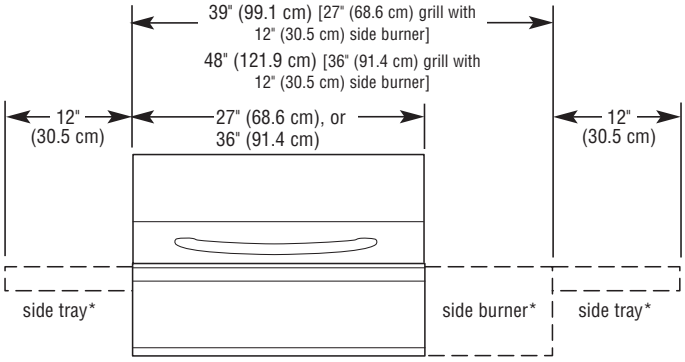

*Not all models have side burner or side trays.

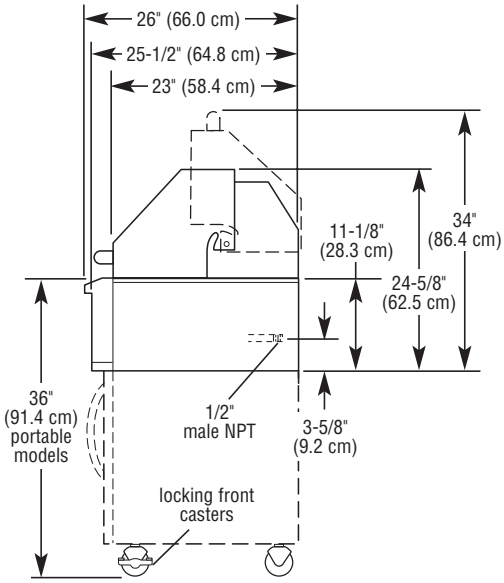

CABINET OPENING DIMENSIONS

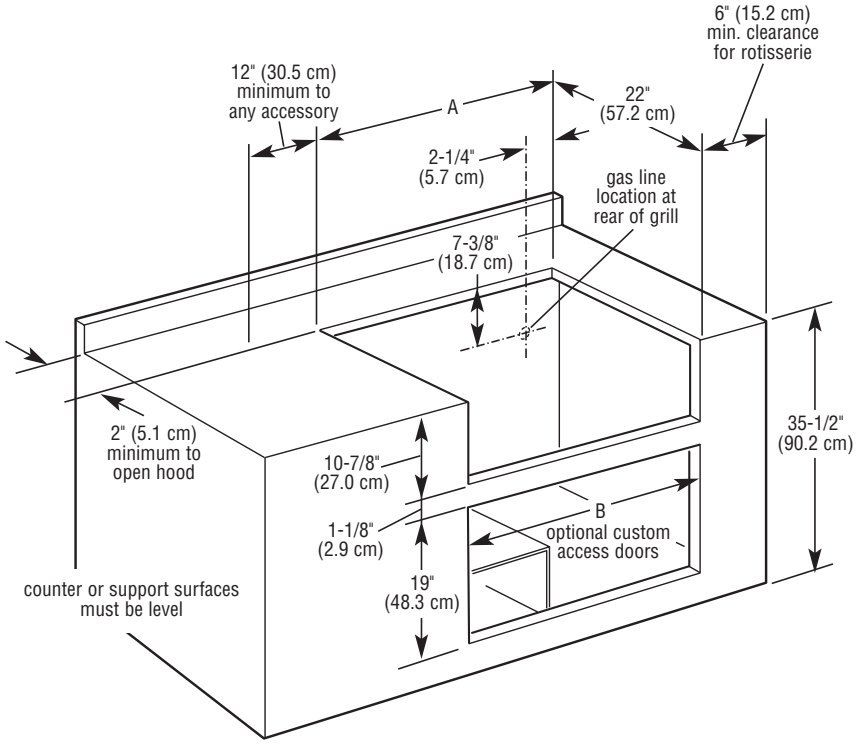

Non-combustible enclosure installations

Grill size	A	B
27" (68.6 cm)	26" (66.7 cm)	25-1/4" (64.1 cm)
36" (91.4 cm)	35" (89.5 cm)	34-1/4" (87.0 cm)
39" (99.1 cm)	38" (97.2 cm)	37-1/4" (94.6 cm)
48" (121.9 cm)	47" (119.4 cm)	46-1/4" (117.5 cm)

Because Whirlpool Corporation policy includes a continuous commitment to improve our products, we reserve the right to change materials and specifications without notice.

Dimensions are for planning purposes only. For complete details, see Installation Instructions packed with product. Specifications subject to change without notice.

Ref. 9758066
12-19-03