CAUTION: DISCONNECT ELECTRIC CURRENT BEFORE SERVICING. LABEL ALL WIRES PRIOR TO DISCONNECTION WHEN SERVICING CONTROLS. WIRING ERRORS CAN CAUSE IMPROPER AND DANGEROUS OPERATION. VERIFY PROPER OPERATION AFTER SERVICING.

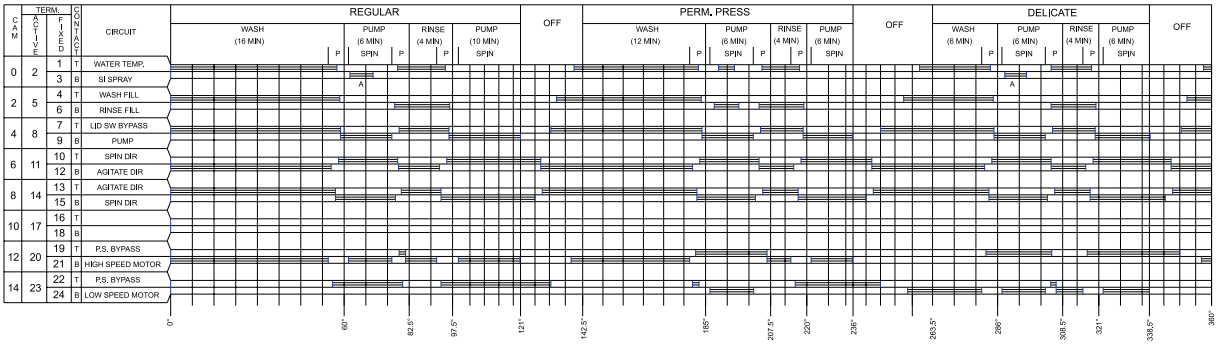

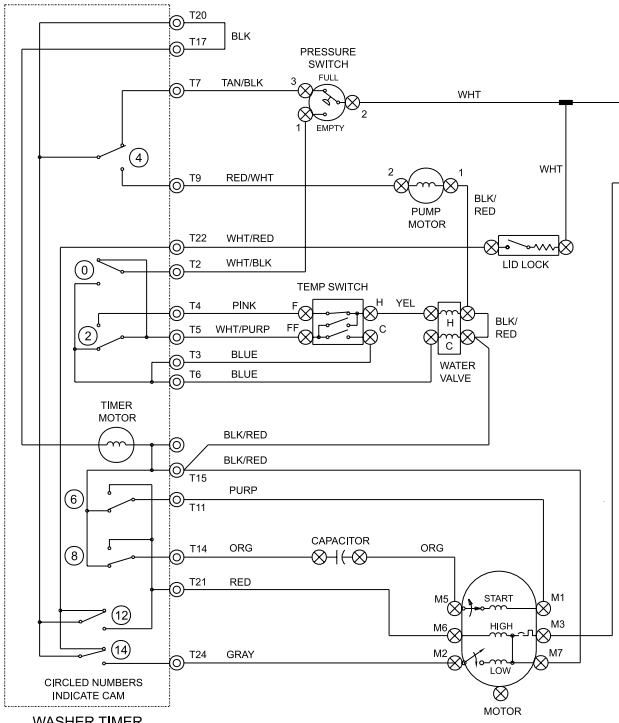

SUBINTERVAL SPRAY DETAIL

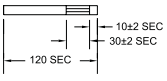

SPRAY TO OCCUR DURING THE INDICATED INTERVAL

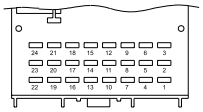

TIMER PLUG-MALE (END VIEW)

WIRING CODES

- PLUG-IN TIMER TERMINAL
- QUICK DISCONNECT TERMINAL
- CONNECTION
- NO CONNECTION
- MOTOR SWITCH
- SPLICE
- MOTOR PROTECTOR
- CHASSIS (CABINET) GROUND
- SCREW TERMINAL
- HARNESS CONNECTOR TERMINAL
- INSULATED TERMINAL

NOTES:

1. ALL WIRING MUST CONFORM TO LOCAL ELECTRICAL CODES.
2. CONNECT DRYER TO 15 AMP INDIVIDUAL BRANCH CIRCUIT.
3. DRYER TIMER SHOWN IN OFF POSITION DOOR SWITCH CLOSED, MOTOR AT REST, THERMOSTAT CLOSED, AND FABRIC SELECTOR SWITCH AT HIGH HEAT.

   WASHER TIMER SHOWN IN ON POSITION TEMPERATURE SELECTOR SWITCH AT HOT WASH/COLD RINSE, AND PRESSURE SWITCH FULL.

TEMPERATURE SWITCH CIRCUIT

	F-H	FF-H	FF-C
WASH/RINSE			
HOT/COLD	X	O	O
WARM/WARM (OPT)	O	X	X
COLD/COLD	O	O	X
WARM/COLD	X	O	X

X=SWITCH CLOSED O=SWITCH OPEN

CYCLES

CIRCUIT		OFF	AUTO DRY (32 20 10 0)	OFF	TIMED DRY (MIN) (75 60 40 20 0)	OFF	AUTO DRY WRINKLE RID (47.5 30 15 0)
TIMER	TM-TD						
TIMER	TM-AD						
HEATER	B-A						
MOTOR	B-C						
BUZZER	X-H						

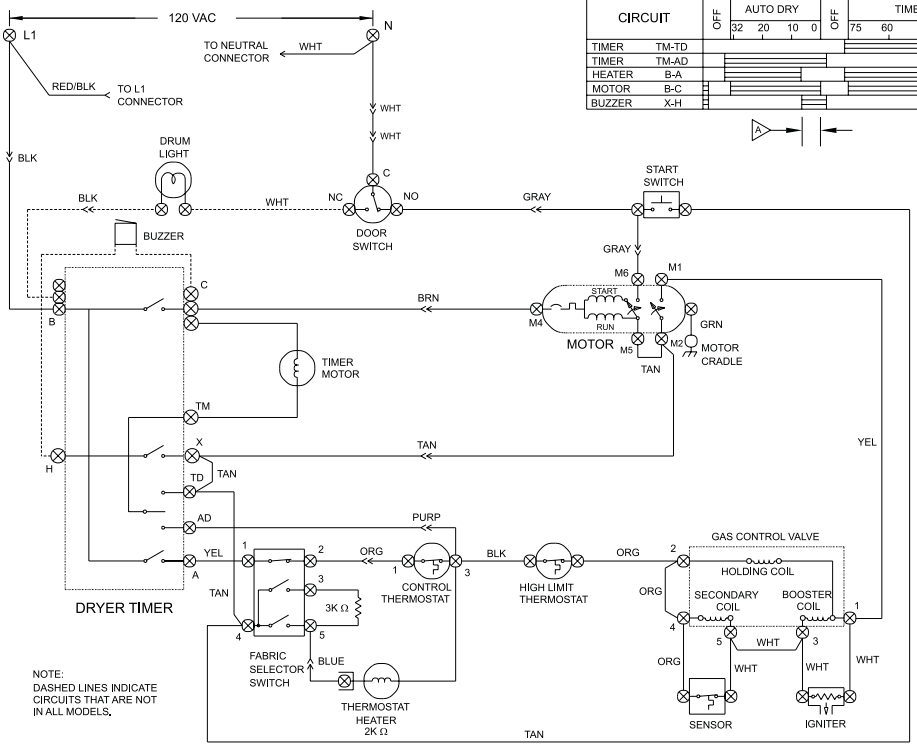

NOTE:
DASHED LINES INDICATE CIRCUITS THAT ARE NOT IN ALL MODELS.

BAR CHART ABOVE REPRSNTS ONE COMPLETE REVOLUTION OF TIMER SHAFT.

SHADED PORTION OF BAR CHART INDICATES THE PROPORTIONAL TIMES THAT INTERNAL TIMER CONTACTS ARE CLOSED.

A PULSER CAM, LOCATED NEXT TO THE BUZZER CAM AND ROTATING AT 12 REVELUTIONS PER HOUR, ALLOWS CURCUIT "X-H" TO CLOSE FOR 5 SECONDS (±3 SECONDS)

A 1 OR 2 TIMES IN THIS AREA

B 5 TO 6 TIMES IN THIS AREA

FABRIC SELECTOR SWITCH

POSITION	1-2	3-4	4-5
NO HEAT	O	O	O
LOW HEAT	X	O	X
MEDIUM HEAT	X	X	O
HIGH HEAT	X	O	O

X= CLOSED 0= OPEN

G

WIRING DIAGRAM
P/N 131992800 A