63611092

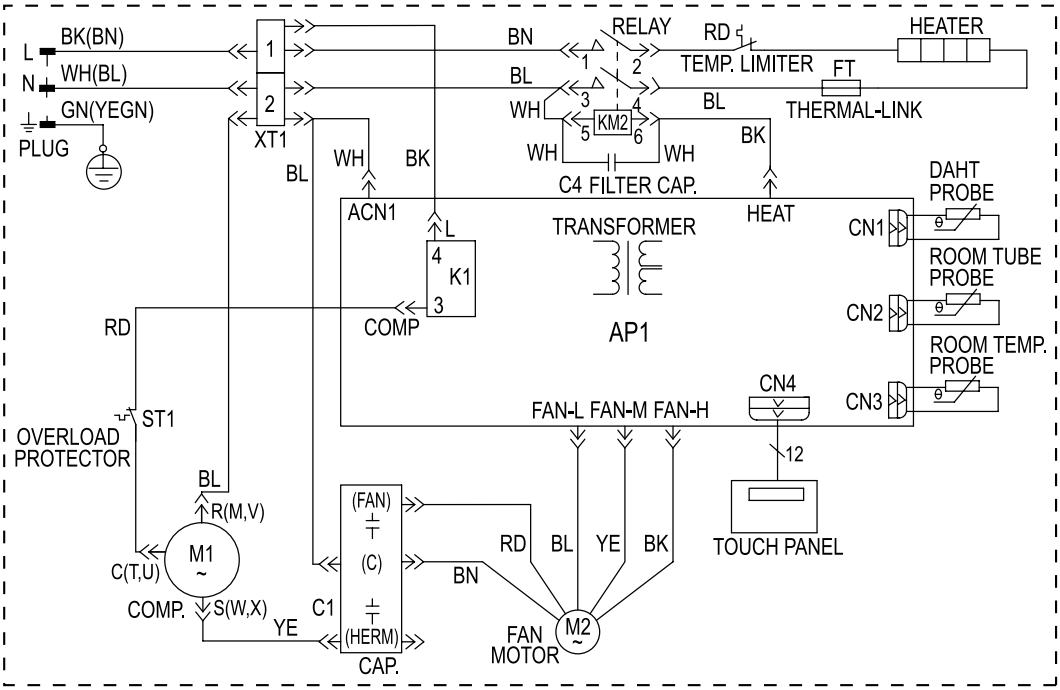
BK(BN)
L
N
WH(BL)
GN(YEGN)
PLUG
1
2
XT1
BN
BL
RELAY
RD
TEMP. LIMITER
FT
THERMAL-LINK
HEATER
WH
3
4
5
6
KM2
WH
WH
C4 FILTER CAP.
BK
WH
BK
BL
ACN1
L
4
K1
3
COMP
TRANSFORMER
HEAT
AP1
DAHT PROBE
CN1
ROOM TUBE PROBE
CN2
ROOM TEMP. PROBE
CN3
CN4
FAN-L FAN-M FAN-H
12
TOUCH PANEL
RD
ST1
OVERLOAD PROTECTOR
BL
R(M,V)
M1
C(T,U)
COMP.
S(W,X)
YE
C1
(FAN)
(C)
(HERM)
CAP.
BN
RD
BL
YE
BK
FAN MOTOR
M2